Transfer or duplication of this doucument as well as the utilisation or communication of its content are not permitted unless express consen is granted. Violations give rise to claims for damages. All rights reserved in case of patent, utility model or design patent registrations.

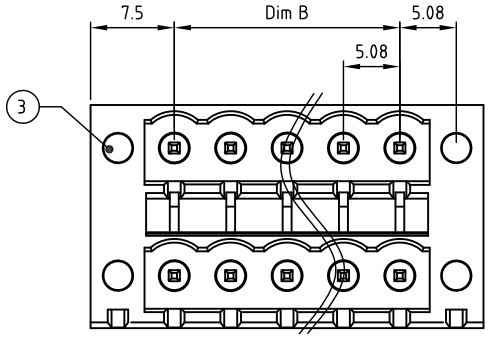

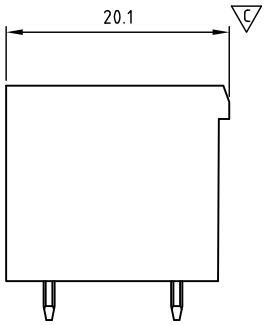

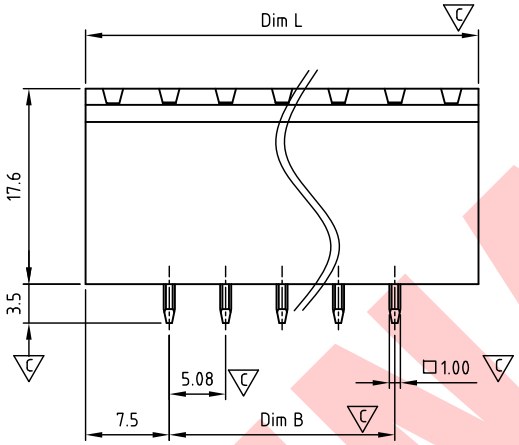

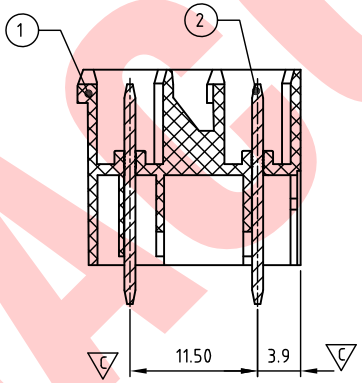

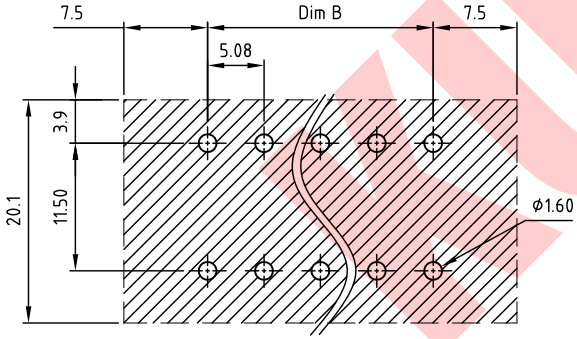

Footprint
for information only

Technical data

1.Nominal voltage: 300V/15A (IEC 320/12A)
PITCH:5.08mm

2.Insulation Withstanding Voltage:
AC 1600V/MIN (AC 2200V/MIN)

3.Insulation Resistance:
1000MΩ or more at DC500V

6.Using temperature range:-40C°~115C°
Soldering temperature:250±10C°/5s

7.Undimen sioned Tolerances:

Dim.L=(P-1)x5.08+15.08
Dim.B=(P-1)x5.08
P=1/2 Number of poles (4-48P)

	Dim B	Dim L
0-30mm	±0.15	±0.20
over 30mm-60mm	±0.20	±0.25
over 60mm-90mm	±0.25	±0.30
over 90mm	±0.30	±0.40

Normal Geometric Tolerancing

	— //	⌯
0-100mm	±0.25	±0.30
over 100mm-150mm	±0.30	±0.30
over 150mm	±0.50	±0.30

	⊥
0-10mm	±0.20
over 10mm	±0.30

8.Safety approval:

9.RoHS Compliance

10.Critical dimension: C

HAFV508 xx x 1xx
①②③

①Poles 04-48(2×02-2×24)
②Color
0 Black 3 Orange 5 Green 6 Blue G Pale Gray.....
③Custom
100 K MARK 10K KUNACON MARK 10N NO MARK.....

ITEM	NAME OF PART	MATERIAL	NOTES	Q"TY
3	FLANGE NUT	BRASS		4
2	PIN 1	COPPER	TIN PLATED	P
1	BODY	PA66 UL94V-0	ALL COLOR	1

DWG.	WF. Zhang	DATE	2019.04.29	UNITS:	MM	SHEET:	1 OF 1
CHK.	WF. Zhang	DATE	2019.07.16	SCALE:	NONE 2:1 (:)	REV.: A	
APP.		DATE		TITLE:	HA-FV508 Series W/F Vertical (180D) Ultra thin type		
				PART NO.	HAFV508xxx1xx		
				DWG NO.	HA-FV508-B101		

Tolerance
X. ±0.50
X.X ±0.30
X.XX ±0.10
X° ±1°

KUNA Contact Technology Co, Ltd
http://www.kunacon.com

REV	SIGN	DESCRIPTION	CHK.	DATE
	1			

KUNACON