Transfer or duplication of this doucument as well as the utilisation or communication of its content are not permitted unless express consen is granted. Violations give rise to claims for damages. All rights reserved in case of patent, utility model or design patent registrations.

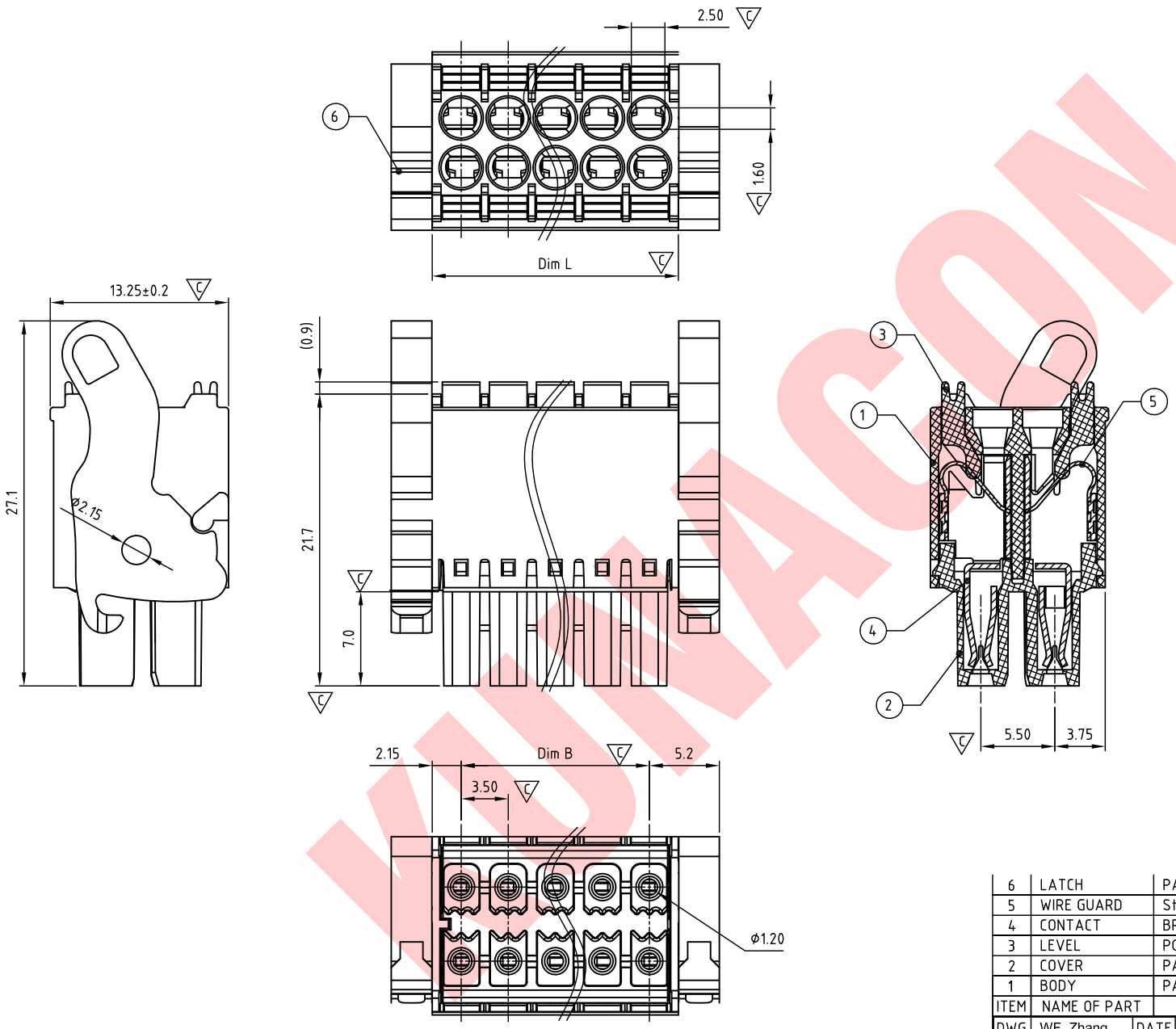

Technical data

1.Nominal voltage: 300V/8A
PITCH:3.5mm

2.Connection capacity:
AWG 24-16

3.Insulation Withstanding Voltage:
AC 1600V/MIN

4.Insulation Resistance:
1000MΩor more at DC500V

5.Stripping length: 9-10mm

6Using temperature range:-40C°-115C°

7.Undimen sioned Tolerances:

Dim.L=(P-1)x3.5+4.2 Dim.B=(P-1)x3.5 P= 1/2 Number of poles(04-48)		
	Dim B	Dim L
0-30mm	±0.15	±0.20
over 30mm-60mm	±0.20	±0.25
over 60mm-90mm	±0.25	±0.30
over 90mm	±0.30	±0.40

8.Safety approval: c UL us

9.RoHS Compliance

10.Critical dimension: C

PDFD350 xx x Lxx
①②③

①Poles 2×2P-2×24P
②Color
0 Black 5 Green 6 Blue G Plae grey.....
③Custom
L00 K MARK L0K KUNACON MARK

ITEM	NAME OF PART	MATERIAL	NOTES	Q"TY
6	LATCH	PA66 UL94V-0	ORANGE	2
5	WIRE GUARD	Stainless steel		P
4	CONTACT	BRONZE (PhBz)	TIN PLATED	P
3	LEVEL	POM UL94HB	ORANGE	P
2	COVER	PA66 UL94V-0	ALL COLOR	1
1	BODY	PA66 UL94V-0	ALL COLOR	1

DWG.	WF. Zhang	DATE	2019.04.24	UNITS:	MM	SHEET:	1 OF 1
CHK.	WF. Zhang	DATE	2020.06.16	SCALE:	NONE 3:1 (:)	REV.: A	
APP.		DATE		TITLE:	PD-FD350 Series Double row Plug With Latch type		
				PART NO.	PDFD350xxxLxx		
				DWG NO.	PD-F350-B101		

Tolerance

X.	±0.50
X.X	±0.30
X.XX	±0.10
X°	±1°

KUNA Contact Technology Co, Ltd
http://www.kunacon.com

REV	SIGN	DESCRIPTION	CHK.	DATE
	1			

KUNACON