Transfer or duplication of this doucument as well as the utilisation or communication of its content are not permitted unless express consen is granted. Violations give rise to claims for damages. All rights reserved in case of patent, utility model or design patent registrations.

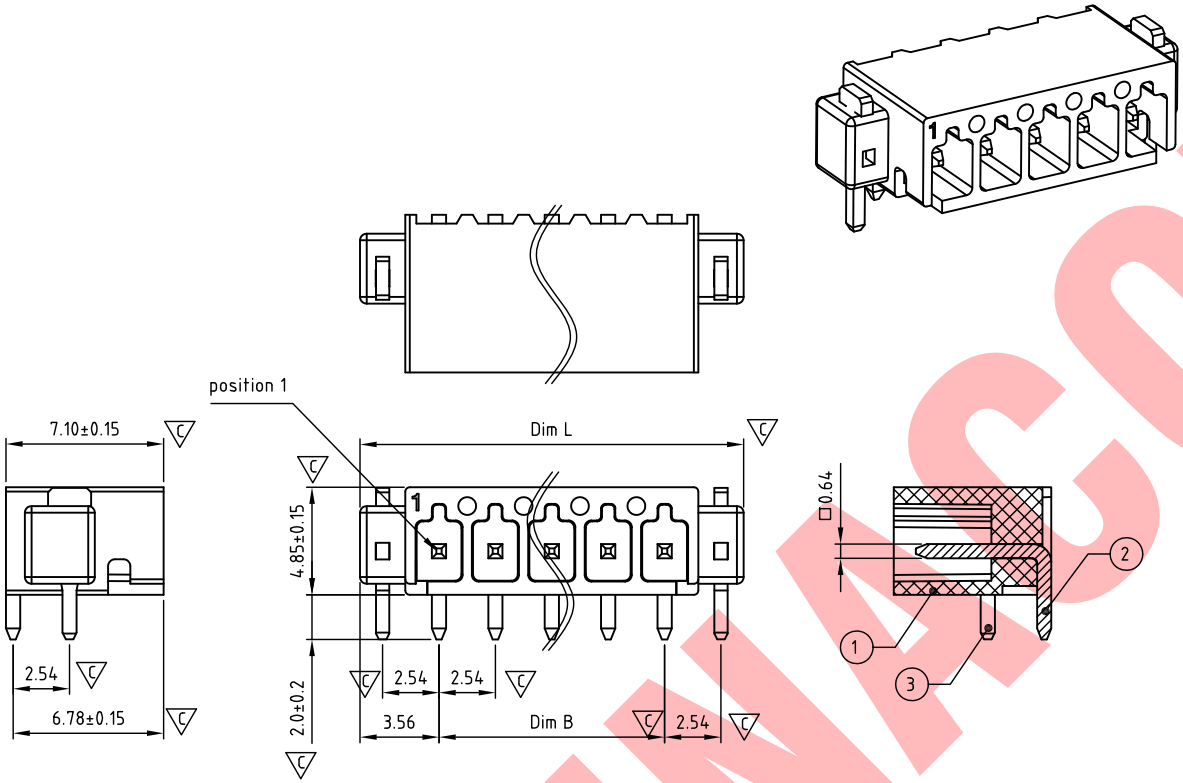

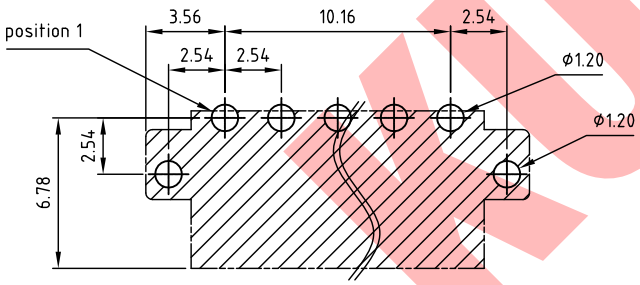

P.C.B. LAYOUT

Technical data

1.Nominal voltage: 150V/6A
PITCH:2.54mm

2.Insulation Withstands Voltage:
AC1300V/MIN

3.Insulation Resistace:
1000MΩ or more at DC500V

4.Using temperature range:-40C°~115C°

5.Soldering temperature range:260C°±5C°/10sec

6.Safety approval: Pending

7.RoHS Compliance

8.Critical dimension: C

9.Undimen sioned Tolerances:

Dim.L=(P-1)x2.54+7.12
Dim.B=(P-1)x2.54
P= Number of poles(02-16)

	Dim B	Dim L
0-30mm	±0.15	±0.20
over 30mm-60mm	±0.20	±0.25
over 60mm-90mm	±0.25	±0.30
over 90mm	±0.30	±0.40

HCCH254 xx x xxx
①② ③

① Poles 02-16
② Color
0 Black
③ Custom
000 K MARK 00K KUNACON MARK.....

ITEM	NAME OF PART	MATERIAL	NOTES	Q"TY
3	FLANGE PIN	BRASS	TIN PLATED	2
2	PIN	Copper	Au 3u" PLATED	P
1	BODY	LCP UL94V-0	BLACK	1

DWG.	WF. Zhang	DATE	2017.09.20	UNITS:	MM	SHEET:	1 OF 1
CHK.	WF. Zhang	DATE	2018.05.21	SCALE:	NONE 4:1 (:)	REV.: A	
APP.		DATE		TITLE:	HC-CH254 Series Right angle (90D) THR Type		
				PART NO.	HCCH254xxxxxx		
				DWG NO.	HC-C254-B001		

Tolerance
X. ±0.50
X.X ±0.30
X.XX ±0.10
X° ±1°

KUNA Contact Technology Co, Ltd
http://www.kunacon.com

SIGN	DESCRIPTION	CHK.	DATE
1			

KUNACON